SIRUI, Capturing Your Imagination!

INSTRUCTIONS

ST-10X Low Gravity Ball Head

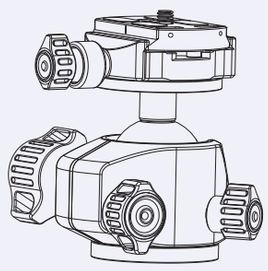

GUANGDONG SIRUI OPTICAL CO.,LTD.
Add: The Third Industrial District, Wuguishan Town, Zhongshan City, Guangdong, China (Zip Code: 528458)
Tel: 86-760-88897373 Fax: 86-760-88207062
E-mail: info@sirui-photo.com Website: www.sirui.com

Specs for the ST-10X

Diameter mm/inch	Height mm/inch	Weight kg/lb	Maximum Load kg/lb
36/1.4	86/3.4	0.46/1.01	20/44.1

Products Info — Official Website
News and Tutorials — YouTube
Services — Facebook

1. Know the Head

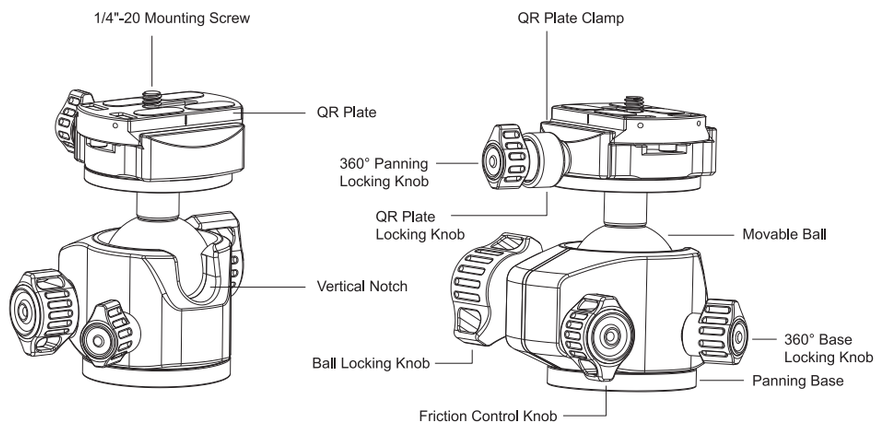

2. Attach the head to a tripod

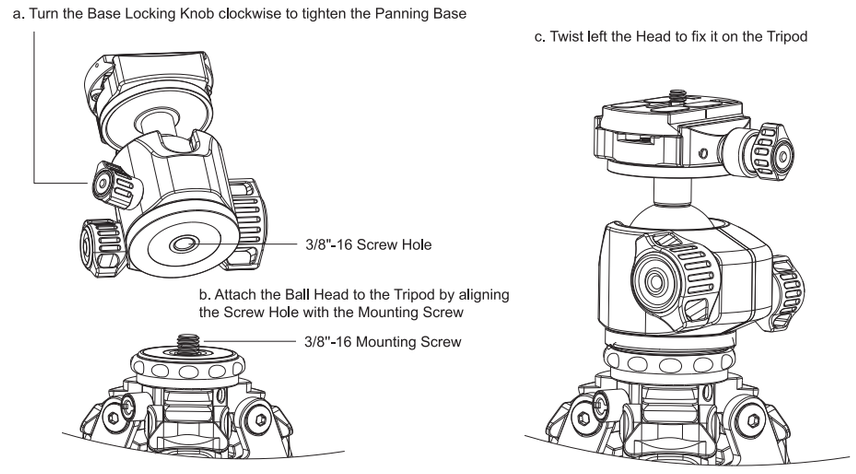

3. Instruction on the knobs

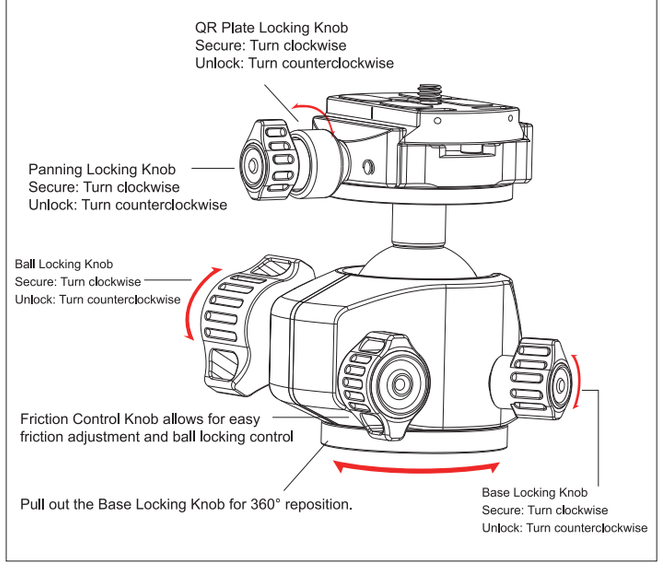

4. Quick Release Plate Setup

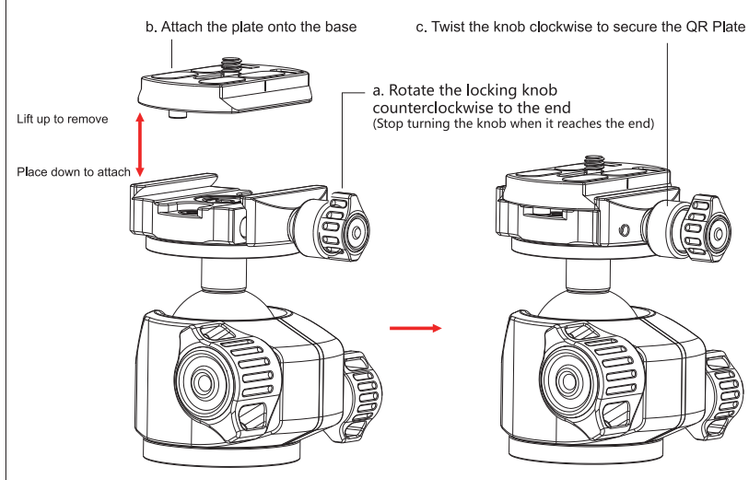

1. Know the Head

2. Attach the head to a tripod
① An UNC 3/8" screw is required for attaching the head onto the tripod if the mounting screw on the tripod is 1/4"-20 compatible or not convertible between 1/4" and 3/8".
② As Figure 2 shown, align the 3/8"-16 screw hole at the bottom of the Head with the 3/8"-16 mounting screw on the tripod. When aligned, hold and turn the head clockwise to attach it into position.

3. Instruction on the knobs

4. Quick Release Plate Setup

5. Notes
a. Manually hold the camera to secure when you attach the camera onto the ball head.
b. The size and mounting position of the camera and camera lens will affect the head's tilting (vertical angle of view). Therefore, do not tilt the head over, as this may damage the head and your gears.

SIRUI 影像随心 思锐随行

使用说明

ST-10X 低重心云台

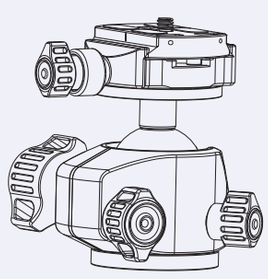

广东思锐光学股份有限公司
地址：广东省中山市五桂山第三工业区 邮编：528458
电话：0760-88897373 传真：0760-88207062 服务热线：400 830 2299
邮箱：info@sirui-photo.com 网址：www.sirui.com
投诉电话：18165639388
(仅限工作日 8:15~12:15,14:00~18:00)

ST-10X低重心云台参数

直径 mm	高度 mm	自身重量 kg	最大负量 kg
36	86	0.46	20

更多服务 — 企业微信
资讯与教程 — 微信公众号
更多产品 — 官方网站

图1 认识云台

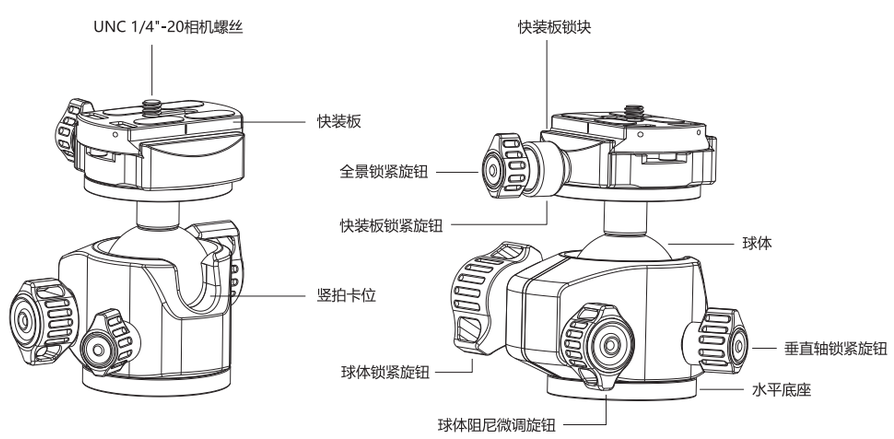

图2 云台与脚架安装示意图

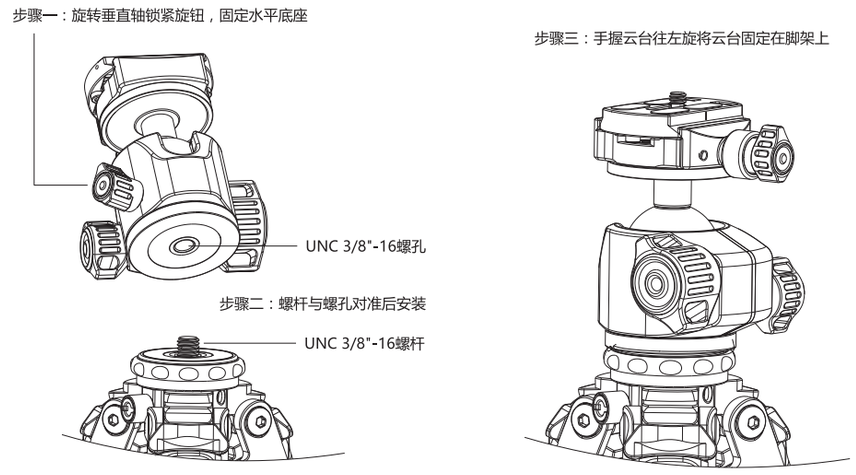

图3 云台的旋钮作用及功能说明

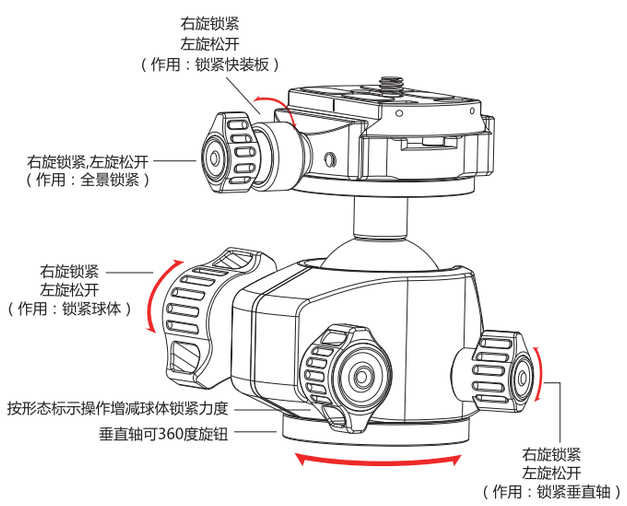

图4 快装板的安装

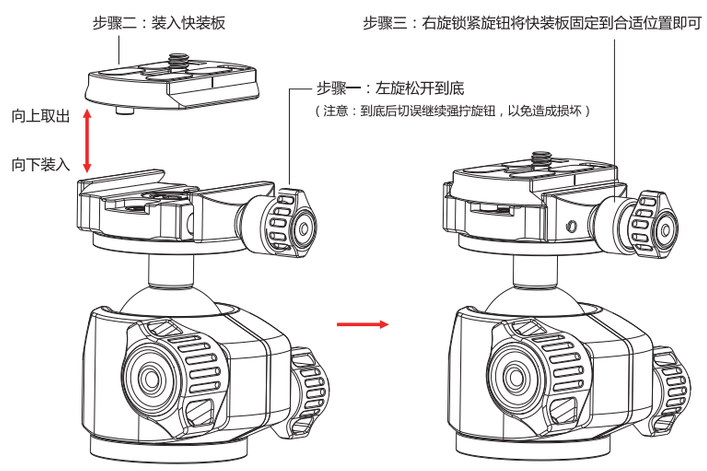

一、图1 认识云台

二、图2 云台与脚架安装
1.云台底座固定螺孔规格为UNC 3/8"-16,如果您的三脚架上是UNC 1/4"-20连接螺丝，那么您需要购买一颗UNC 3/8"-16的转接螺丝。
2.如图所示，把云台底部的UNC 3/8"-16牙孔对准脚架上的UNC 3/8"-16螺杆，然后顺时针旋转云台底座至牢固锁紧为止。

三、图3 云台的旋钮作用及功能说明
如图3所示

四、图4 快装板的安装
如图4所示

五、注意事项
1.在云台上安装摄影设备时，请用手扶稳设备，以防意外跌落。
2.在操作时，云台纵向视角会因镜头及相机长短大小、安装位置不同会变化，所以要注意操作角度，请不要超过限度，以防对设备造成碰撞。

SIRUI

Global Distributor Directory

Products Info

Official Website

News and Tutorials

YouTube

Services

Facebook

V1.0 2021.07

Thank you for purchasing SIRUI products! SIRUI will provide free warranty service if the product fails due to poor materials and workmanship under normal use.

The global agents are ranked in no particular order. If after-sales service is required, please contact the local agent first.

Headquarter of SIRUI Optical Co., Ltd.

After-Sale Service Hotline: 400 830 2299

Complaints Hotline: 181 6563 9388

Singapore/T K Foto Technic Pte Ltd

Address: Funan 107 North Bridge Rd #03-09 Singapore 179105

Tel: +65 6904 6610 **Fax:**+65 6904 6620

http: //www.tkfoto.com.sg **E-mail:** ark@tkfoto.com.sg

India/Foto centre Trading Pvt. Ltd

Address: Foto Centre Trading Pvt.Ltd* 303, 3rd Floor, Ravi Building, 189-191, Dr. D. N. Road, Mumbai-400 001.Maharashtra,India **Tel:** 0091-9820110120

http: //www.sirui.in **E-mail:** info@sirui.in

Canada/LightPro Group Inc

Address: 3206 Wharton Way Mississauga, ON L4X 2C1

Toll Free: 1-800-361-9682 Tel: 905-940-9262

http: //www.lightprogroup.com **E-mail:** Sales@lightprogroup.com

Kazakhstan/PSP Digital

Address: г. Алматы, проспект Абая 130 (территория ЖК «Abay 130»)

Tel: 8 707 217 03 99 8 707 958 54 94

http: //pspdf.kz/contacts **E-mail:** pspkz@mail.ru

Russia /REQUIRED, LLC

Address:

Tel: 8 (499) 500-96-27

http: //kremlinstore.ru **E-mail:** order@kremlinstore.ru

Romania/West Buy S.R.L

Address: Bdul. Mircea Voda nr. 36, Sector 3, Bucharest, Romania, 030688

Telephone: +(4)021.3205652 Tel/Fax: +(4)021.3205655 Mobile: +(4)0745414956

Mobile: +(4)0752111704 Mobile: +(4)0756111947 Mobile: +(4)0752110439

http: //www.westbuy.ro **E-mail:** westbuy1@gmail.com

Slovenia/Infocona d.o.o

Address: Prevale 9, 1236 Trzin

Tel: 01/ 562 00 61 **http:** // **E-mail:** info@infocona.si

Turkey/siruiturkiye

Address: Çobançesme Mah. Sanayi Cad. Kımız Sk. No:12 Yenibosna Bahçelievler, İstanbul

Tel: 0(850)222 37 73

http: //www.siruiturkiye.com **E-mail:** oceltikci@essegrup.com

Hong Kong/HONG KONG RUIJIE TRADING COMPANY LIMITED

Address: UNIT C 15/F HUA CHIAO COMM CTR 678 NATHAN RD MONGKOK KL

Tel: 00852-9409 5241

http: // **E-mail:** paulli34@foxmail.com

South Africa/Sunshine Distribution PTY LTD

Address: 29 Keyes Avenue, Rosebank Johannesburg, 2196, South Africa

Mobile: +27 79 641 0288 **Phone:** +27 11 268 0803

http: //www.sunshineco.co.za **E-mail:** Willem@sunshineco.co.za

Israel/Argol LTD

Address: 19 Hamerkava st.Holon 5885113 Israel

Tel: +972-3-5581901-6 **Fax:** +972-3-5501148

http: //www.argol.co.il **E-mail:** eli@argol.co.il

Malaysia/Leomax (M) Sdn Bhd

Address: B-5-7, block B, Pusan komersial southgate Jln dua, off jln Chan sow Lin 55200 Kuala Lumpur, Malaysia **Tel:** (+603)9224 2001

http: //www.leomax.com.my **E-mail:** account@leomax.com.my

Panama /TODO FOTO PANAMA

Address: Avenida Justo Arosemena y Cl. 45 Este,Panamá Ciudad de Panamá

Tel: 225-4620 / 203-1288

http: //www.todofotopanama.com **E-mail:** rosa@todofotopanama.com

Nigeria/Nextgen Media Ltd

Address: 73, Allen Avenue, Ikeja, Lagos

M. +234 (0) 805 1987 394 | +234 (0) 909 1094 565

http: //www.nextgentv.tv **E-mail:** Afolasade.OK@nextgentv.tv

Ukraine/BIGggSALE.com

Address: Ровно: ул. Данила Галицького 19, 718 офис. (Главный офис)

Tel: (096)308-36-00;(063)308-36-00;(066)308-36-00

http: //BIGggSALE.com **E-mail:** shop@bigggsale.com

Luxembourg /TSE Imaging BV

Address: Argonweg 135, 1362 AD Almere,

Tel: +31 (0) 36 8450348

http: //www.tseportal.nl **E-mail:** service@tokina.eu

Belgium/TSE Imaging BV

Address: Argonweg 135, 1362 AD Almere,

Tel: +31 (0) 36 8450348

http: //www.tseportal.nl **E-mail:** service@tokina.eu

Italy /TOSCANA FOTO SERVICE S.r.l.

Address: Via Ponte all' Asse, 2/4, 50019 Sesto Fiorentino (FI)

Tel:

http: //www.sirui-italia.it **E-mail:** info@fotocomm.it

Poland/Focus Nordic

Address: Al. Jerozolimskie 180, 02-486 Warszawa

Tel: +48 697 991 248

http: //www.focusnordic.pl **E-mail:** info@focusnordic.pl

Taiwan/Tai Nein Company Ltd.

Address: 2F, No.29, Ren Ai Road, Sec 2, Taipei, Taiwan
Tel: +886-2-33433966 **Fax:**+886-2-33433969
http: //www.lf99.com **E-mail:** tainein@ms23.hinet.net

Thailand/ 456 Marketing Company Ltd

Address: 636/12 Soi Ramkhamhaeng 39 (Thepleela1), Wangthonglang, Bangkok 10310, Thailand. **Tel:** (+662)934-6565
http: //www.456mkt.com **E-mail:** online@456mkt.com

Japan/常盤写真用品株式会社

Address: 〒460-0011 名古屋市中区大須4丁目3番43号
Tel: 052-251-0351 **Fax:** 052-251-0981
http: //www.sirui-japan.com **E-mail:** takahashi@tokiwasyashin.co.jp

New Zealand/Photogear

Address: (1) 3/2 Tawa Drive, Rosedale, Auckland (2) 49 Mackelvie Street, Ponsonby, Auckland
Tel: (+64) 9 4792886
http: //www.photogear.co.nz **E-mail:** support@photogear.co.nz

Slovakia/Focus Nordic AB

Address: KUTA centrum, Zelený pruh 95/97, 140 00 Praha 4, Česká Republika
Tel: +420 604 582 550
http: //www.focusnordic.sk **E-mail:** info@focusnordic.sk

Czech Republic/Focus Nordic

Address: Zeleny pruh 95/97, 140 00 Praha 4
Tel: +46 31 336 23 00
http: //www.focusnordic.cz **E-mail:** info@focusnordic.cz

Netherlands/TSE Imaging BV

Address: Argonweg 135, 1362 AD Almere,
Tel: +31 (0) 36 8450348
http: //www.tseportal.nl **E-mail:** service@tokina.eu

Estonia/Focus Nordic

Address:
Tel: +46 31 336 23 00
http: //www.focusnordic.ee **E-mail:** info@focusnordic.ee

Vietnam (Hanoi)/SÔNG HỒNG CAMERA

Address: SÔNG HỒNG CAMERA - 44 TRÀNG THI, HOÀN KIẾM, HÀ NỘI
Tel: Hotline CH: 098.888.2533 - 024.3938.2267
http: //www.songhongcamera.com **E-mail:** banhang@songhongcamera.com

Vietnam (Ho Chi Minh)/Rawshop.vn

Address: 61 Đường Núi Thành, Phường 13, Tân Bình, Thành phố Hồ Chí Minh, Vietnam
Tel: 00842862656999
http: //rawshop.vn **E-mail:** thanhnam79@gmail.com

Saudi Arabia/Cameramix

Address: Al-Manar, Jeddah 23462 Saudi Arabia
Tel: 00966126282444
http: //cameramix.com **E-mail:** sales@cameramix.com

Al-Manar, Jeddah 23462 Saudi Arabia

Republic of Korea/ Daekwang Enterprise

Address: Namdaemunno 10, Jung-gu, Seoul, South Korea (zip: 04528)
Tel: (+82) 2-752-3304
http: //www.sirui.co.kr **E-mail:** daekwangas@gmail.com

Australia/ DISCOUNT DIGITAL PTY LTD

Address: Suite1,64 Alexander St, crows Nest NSW2065, Australia
Tel: (+61)408 660 083
http: //www.pixelone.com.au **E-mail:** sales@pixelone.com.au

Indonesia/ Focus Nusantara

Address: Jln.Tanah Abang II No 77 Jakarta Pusat -10160, Indonesia
Tel: (+62)21 380 8080
http: //focusnusantara.com **E-mail:** saiful@focusnusantara.com

Republic of Lithuania /Focus Nordic

Address: Vienibas Avenue 109, LV-1058 Riga Latvia

Tel: +37 06 12 86 120

http: //www.focusnordic.lt **E-mail:** info@focusnordic.lt

Sweden/Focus Nordic AB

Address: Bergsjödalen 48, 41568 Gothenburg

Tel: +46 31 336 23 00

http: //www.focusnordic.com **E-mail:** info@focusnordic.se

Norway/Focus Nordic

Address: Ringeriksveien 164, 1339 Voyenenga

Tel: +47 67 17 37 00

http: //www.focusnordic.no **E-mail:** info@focusnordic.no

Finland/Focus Nordic

Address: Knitter Business Park, Kutojantie 6-8, FI-02630 Espoo

Tel: +35 89 42 83 41 01

http: //www.focusnordic.fi **E-mail:** info@focusnordic.fi

Denmark/Focus Nordic

Address: Erhvervsvej 30, DK-2610 Rodovre

Tel: +46 31 336 23 00

http: //www.focusnordic.dk **E-mail:** info@focusnordic.dk

Iceland/Focus Nordic

Address:

Tel: +46 31 336 23 00

http: //www.focusnordic.is **E-mail:** info@focusnordic.is

Latvia /Focus Nordic

Address: Vienibas Avenue 109, LV-1058 Riga Latvia

Tel: +46 31 336 23 00

http: //www.focusnordic.lv **E-mail:** info@focusnordic.lv

Sri Lanka/CameraLK Store

Address: CameraLK Colombo: 263, Highlevel Road Colombo 05 00500 - Western
CameraLK Majestic City: No 28, 3rd Floor Majestic City Colombo 04 00400 - Western
CameraLK Kandy: 127A 1/1 D S Senanayake Veediya Kandy 20000 - Central Province
0812233872

Tel: +(94) 117 817 870

http: //www.cameralk.com **E-mail:** ushitha@cameralk.com

Kenya/Cameras Africa

Address: Nairobi along Kenyatta Avenue, next to Phoenix House. 1 Min Walk from Sentrim 680 Hotel

Tel: 00254722764900

http: //www.camerasafrica.com **E-mail:** sales@camerasafrica.com

SIRUI

Garantie
Warranty
Garantía
Garanzia

For EU Market Only

SIRUI Professional Photographic Equipment

Product	Warranty length
Tripods / Monopods / Heads / Accessories	**6 years**
Humidity Control Cabinet (only Cabinet)	**6 years**
Humidity Control Cabinet (Electronics)	**3 years**
Filters / Smartphonetools / Electronic Devices	**2 years**

Produkt	Garantie Zeitraum
Stative / Köpfe / Zubehör	**6 Jahre**
Humidor Schränke (nur Schränke)	**6 Jahre**
Humidor Schränke (elektronisch)	**3 Jahre**
Filter / Smartphonezubehör / Elektronische Geräte	**2 Jahre**

Model, Modell, Modèle, Modelo

Date, Datum, Fecha, Data

Dealer, Händler, Marchand, Comerciante, Negociante

European Service Center:

SIRUI Optical GmbH • Ernst-Augustin-Str. 1a • 12489 Berlin • Germany
Phone: +49 30 991 94 94 00
Email Address : info@siruioptical.eu

Deutsch

Die SIRUI Optical GmbH, Ernst-Augustin-Str. 1a, 12489 Berlin, gewährt Käufern eine Garantie von 6 Jahren ab Kaufdatum auf die Freiheit von Herstellungs- und Materialfehlern dieses Produkts. Von dieser Garantie nicht erfasst sind Schäden durch mechanische Beeinträchtigungen, große Hitze, nicht bestimmungsgemäße Verwendung sowie Abhandenkommen. Diese Garantie gilt nur in Verbindung mit dieser Garantiekarte und einem in Europa ausgestellten Kaufbeleg. Die gesetzlichen Rechte – insbesondere die gesetzlichen Gewährleistungsrechte – bleiben hiervon unberührt. Im Garantiefall wenden Sie sich bitte an das umseitig genannte Servicecenter.

English

SIRUI Optical GmbH, Ernst-Augustin-Str. 1a, 12489 Berlin, guarantees purchasers that this product will remain free from manufacturing and workmanship defects for 6 years from the date of purchase. Damage caused by mechanical damage, excessive heat, improper use and loss are not covered by this warranty. This warranty is valid only in connection with this warranty card and a receipt issued in Europe. Statutory rights – in particular the statutory warranty rights – remain unaffected. In the event of a warranty claim please contact the service centre listed overleaf.

Français

La société SIRUI Optical GmbH, Ernst-Augustin-Str. 1a, 12489 Berlin, Allemagne, offre aux acheteurs une garantie de 6 ans, à compter de la date d'achat, contre tous défauts de fabrication ou de matériaux. Cette garantie ne couvre pas les dommages causés par des problèmes mécaniques, la chaleur excessive, l'utilisation abusive et la perte. La garantie est uniquement valable si associée à la présente carte de garantie et une preuve d'achat délivrée en Europe. Les droits légaux en particulier les droits de garantie prévus par la loi restent inchangés. En cas de recours à la garantie, veuillez vous adresser au centre de service mentionné au recto.

Italiano

La SIRUI Optical GmbH, Ernst-Augustin-Str. 1a, 12489 Berlin, offre agli acquirenti una garanzia di esenzione da difetti di fabbrica e di lavorazione di questo prodotto, della durata 6 anni dalla data di acquisto. Tale garanzia non copre alcun danno causato da guasto meccanico, calore eccessivo, uso improprio nonché perdita. La garanzia è valida solo se accompagnata dalla presente scheda di garanzia e ad una prova di acquisto rilasciata in Europa. I diritti legali - in particolare, i diritti di garanzia previsti dalla legge - rimangono inalterati. In caso di intervento in garanzia, si raccomanda di rivolgersi al centro di assistenza indicato sul retro.

Español

La sociedad SIRUI Optical GmbH, Ernst-Augustin-Str. 1a, 12489 Berlin, otorga a sus compradores una garantía de 6 años a partir de la fecha de compra por los vicios ocultos y defectos de fabricación de este producto. La garantía no cubrirá los daños ocasionados por desgastes mecánicos, altas temperaturas, un uso no conforme con lo prescrito o por pérdida o extravío, y sólo será válida presentando esta carta de garantía y el comprobante de compra expedido en Europa. Lo anterior no afectará a los derechos legales y, en particular, a los derechos de garantía legales. En el caso contemplado en la garantía, le rogamos se ponga en contacto con el Centro de atención al cliente, cuya dirección consta en el dorso de esta carta de garantía.

Portugués

A SIRUI Optical GmbH, Ernst-Augustin-Str. 1a, 12489 Berlin, garante aos seus clientes uma garantia de 6 anos a partir da data de aquisição relativa à liberdade de defeitos de produção e fabrico do produto. Esta garantia não cobre danos causados por efeitos adversos decorrentes de avaria mecânica, calor excessivo, utilização indevida, ou perda. Esta garantia é apenas válida mediante apresentação deste cartão de garantia e um recibo emitido na Europa, sem prejuízo dos direitos legais (em particular, os direitos legais de garantia). Em caso de reclamação, contate o centro de serviço referido no verso.

SIRUI Warranty

Professional Photographic Equipment

For US Market Only

SIRUI USA, LLC
For technical support,service or repairs please,contact:
29 Commerce Court Verona, NJ 07044
info@sirui.com Phone: 866-373-0829

Thank you for your purchase of Sirui professional products! Sirui warrants that your purchase is free from defects in materials and workmanship, under normal use during the Limited Warranty period. The warranty period starts on the original date of purchase on your sales receipt. If service is required, please include a copy of the sales receipt and this warranty card, with an explanation of the problem. Please store your sales receipt and warranty card in a safe location.

Product	Warranty period
Tripods and Heads	6 years
Optical and Smart Products	1 year (Battery: 6 months)
Humidity Control Cabinets	6 year (Electronic components: 3 years)

Model purchased : _____

Date : _____

Store : _____

Serial number : _____

Sirui USA Limited Warranty
This warranty is limited to the repair, adjustment and/or replacement, at Sirui or its authorized distributor's option, of defective parts, free of charge (except the cost of transportation to the distributor/service center). Responsibility is limited to actual cost of item.
Register online at www.sirui.com. Call or email with questions or problems, before sending product in for repair. For warranty service on product purchased in the USA, all shipping and insurance charges must be prepaid. Include a copy of the sales receipt, this warranty card and an explanation of the problem. The product or defective part(s) may be sent through a local authorized SIRUI USA dealer or directly to the SIRUI USA distributor/service center indicated on this warranty card.
Sirui will not be responsible for expenses or inconveniences, or consequential damages to equipment, or by breach of any expressed or implied warranty.
Out-of-warranty repairs - An estimate (including shipping costs) will be provided by the SIRUI USA distributor/service center indicated on this warranty card and repairs will begin once the estimate is approved and payment is received. A return shipping fee will be charged for refused estimates.
Limitations
Warranty is non-transferable. This warranty covers all defects encountered in normal use of the equipment and does not apply in the following cases:
1) If the equipment has been serviced by other than an authorized Sirui distributor or service center.
2) Damage to the equipment due to modification, overloading, mishandling, abuse, accident, sand, corrosives, water damage or not following operating instructions.
3) No valid proof of purchase is provided.
4) Damage caused by acts of nature (including, but, not limited to fires, floods or earthquakes).
This warranty is only valid when product is purchased from an authorized SIRUI USA dealer.

Please visit SIRUI's USA official website or consult the local dealer for the Return and Exchange Policy.