图纸名称：雨伞式手机三脚架说明书
物料编号：MS-P006
展开尺寸：360x210mm
成型尺寸：72x105mm
材质：100g双胶纸
印刷：CMYK四色印刷
备注：虚线为折线

说明书正面：

SIRUI

Instructions
Umbrella Tripod
MS-01K

GUANGDONG SIRUI OPTICAL CO.,LTD.
Add: The Third Industrial District, Wuguishan Town, Zhongshan City, Guangdong, China (Zip Code: 528458)
Tel: 86-760-88897373 Fax: 86-760-88207062
E-mail: info@sirui-photo.com Website: www.sirui.com

Specifications for the MS-01K

	Sections	Tube Dia. mm/inch	Min. Height mm/inch	Max. Height mm/inch	Folded Height mm/inch	Weight kg/lb	Max. Load kg/lb
MS-01K	5	25/0.98	400/15.7	1380/54.3	355/13.98	0.39/0.86	0.4/0.88

1. Know the Tripod

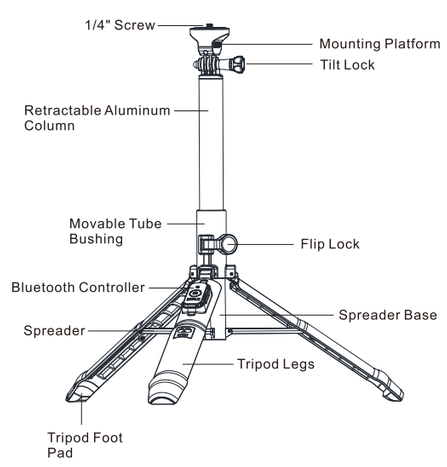

Fig. 1

2. Unfold the Tripod

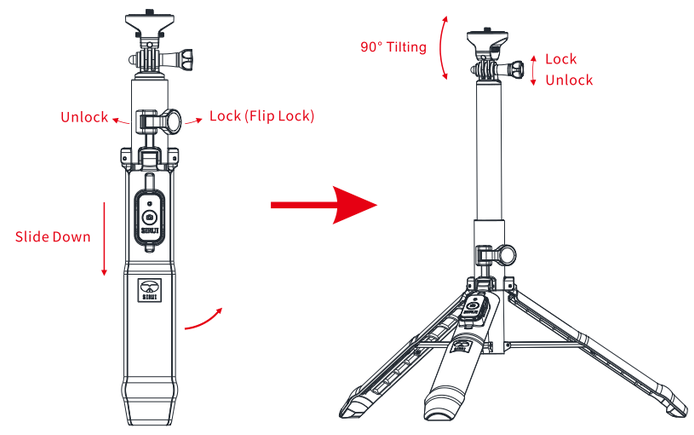

① To unfold the tripod, first flip the lock;
② Separate the tripod legs to open the spreader along with the tube bushing sliding down;
③ Flip back to secure.

For multi-angle shots, rotate the Tilt Lock counterclockwise to tilt the platform then secure with clockwise turn of the locking knob.

Fig. 2

3. Attach/Remove a phone clamp or other accessory

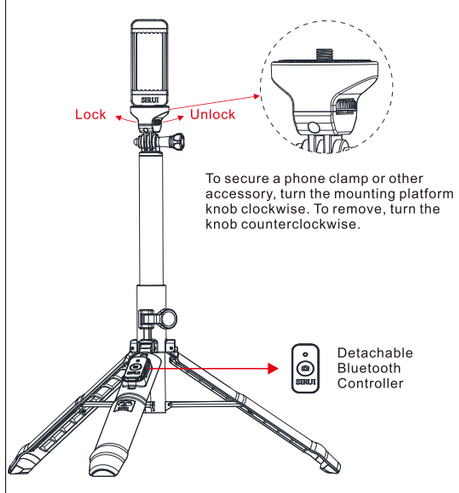

To secure a phone clamp or other accessory, turn the mounting platform knob clockwise. To remove, turn the knob counterclockwise.

Fig. 3

4. Extend/Retract the Column

To adjust the working height,
a. Grip the mounting platform and turn it counterclockwise to unlock.
b. Slide up or down to extend or retract the column.
c. Turn the mounting platform clockwise to lock.

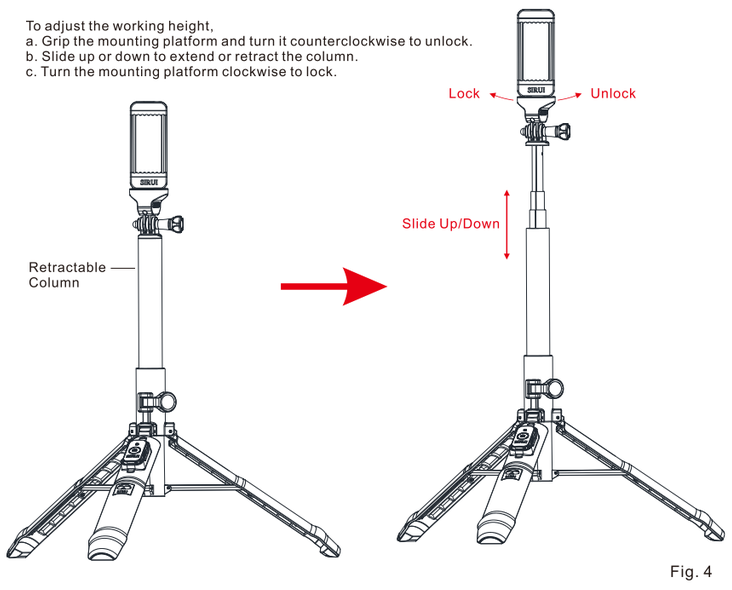

Fig. 4

WARRANTY CARD / INFORMATION

Dear SIRUI Customer,
Thank you for your purchase of SIRUI Professional Products!
SIRUI warrants that your purchase is free from defects in materials and workmanship under normal use during the Limited Warranty Period. The Warranty begins on the original date of purchase on your sales receipt and is not transferrable. If service is required, a copy of the sales receipt must be included with an explanation of the problem.

Product	Warranty Length
Umbrella Tripod	1 year

Model: _____ Date: _____

Store: _____ Serial Number: _____

Warranty coverage can differ from region to region.
Please see the contact information below for product registration, information and service for the region the product was purchased in.

SIRUI 1 Year Limited Warranty of the product.This warranty shall be limited to repair,adjustment and/or replacement at SIRUI or its authorized distributors option,of defective parts,free of charge(except the cost of transportation to the distributor/service center).Responsibility is limited to the actual cost of the item. Call or Email with questions and service before sending any product to the center in your region.Below is a listing of contact information for Product Registration, Service Inquiries and Questions.SIRUI will not be responsible for expenses or inconveniences,or consequential damages to equipment,or by breach of any expressed or implied warranties.

Limitations:
Warranty is not transferable.
This warranty covers all defects encountered in normal use of the equipment and does not apply in the following cases:
1. If the equipment has been serviced by other than an authorized SIRUI Service Center.
2. Damage to the equipment is due to modification (including but not limited to, the removal of ballhead clamps), overloading, mishandling, abuse, accident, sand*, corrosives, water damage* or not following operating instructions.
3. No valid proof of purchase is provided.
4. Damage caused by acts of nature (including, but not limited to fires, floods or earthquakes).

Warranty Address and Contact Information:
(Please contact the seller or the local distributor where the product was purchased for warranty issues or questions and before any product is sent.)

1.Guangdong SIRUI Optical Co., Ltd.
The Third Industrial District, WuguishanTown, ZhongshanCity, Guangdong, China
Tel:0086-760-88897373 Fax:0086-760-88207062
Http://www.sirui.com E-mail: info@sirui-photo.com
Service Hotline: 0086-400 830 2299
Complaint Hotline: +86-181 6563 9388
(Monday to Friday: 8:15am~12:15pm, 14:00pm~18:00pm)

2.SIRUI USA, LLC
Add: 29 Commerce Court Verona, NJ 07044
www.sirui.com
Service: Toll Free 866-373-0829 E-mail: info@sirui.com
FOR PRODUCTS PURCHASED IN THE USA PLEASE SEE:
For full details on USA Warranty Terms and Limitations:
https://www.siruiusa.com/warranty.html
To register products: https://www.siruiusa.com/product-registration.html

3. European Service Center
Add: SIRUI Optical GmbH • Ernst-Augustin-Str.1a • 12489 Berlin • Germany
Phone:+49 30 991 94 94 00 • Email: Info@siruioptical.eu

※The company reserves the right to upgrade products and modify product specifications without prior notice. Please accept our apologies for any inconvenience we may have caused.

说明书背面：

SIRUI

使用说明
雨伞式手机三脚架
MS-01K

广东思锐光学股份有限公司
地址：广东省中山市五桂山第三工业区 邮编：528458
电话：0760-88897373 传真：0760-88207062 服务热线：400 830 2299
邮箱：info@sirui-photo.com 网址：www.sirui.com
投诉电话：18165639388
(仅限工作日 8:15~12:15,14:00~18:00)

雨伞式手机三脚架MS-01K参数

	节数	管径 mm	最小高度 mm	最大高度 mm	收缩高度 mm	自身重量 kg	最大负重 kg
MS-01K	5	25	400	1380	355	0.39	0.4

1.认识产品

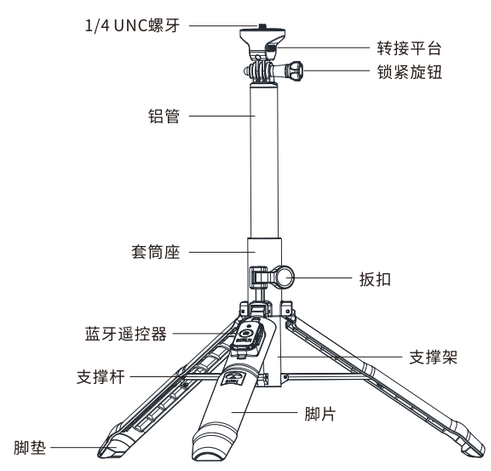

图1

2.脚架打开

① 按箭头方向打开扳扣，再向外打开脚片；
② 将套筒座向下滑动到位，最后锁紧扳扣。

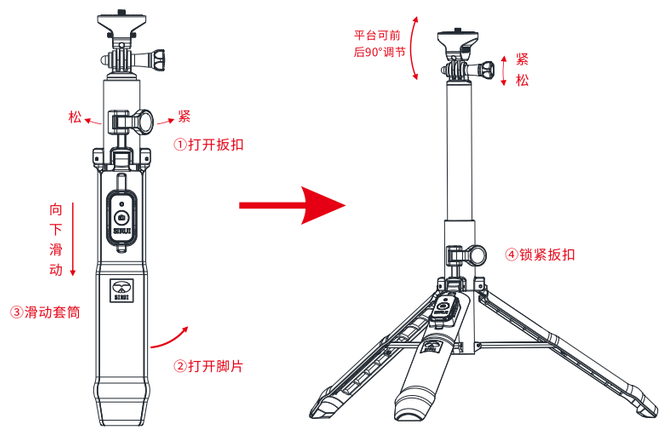

收纳状态　　打开状态

图2

3.配件拆装

图3

4.脚架伸缩

按箭头方向松开/锁紧铝管，上下滑动铝管至适当高度。

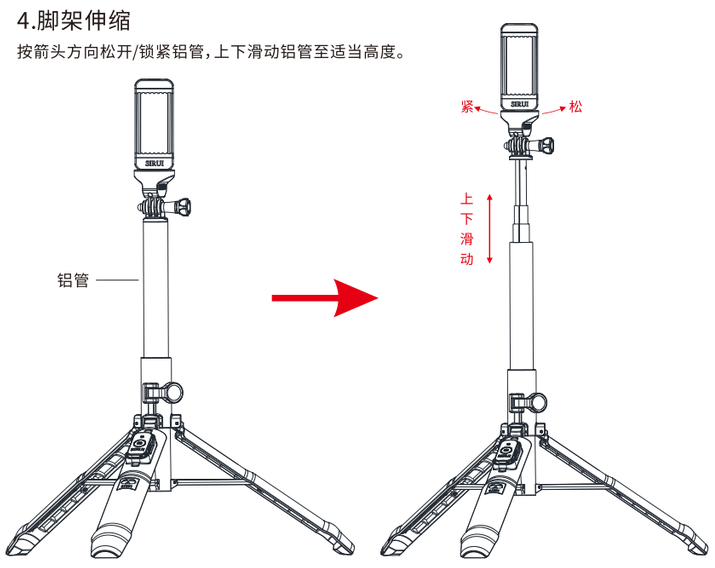

图4

保修卡

尊敬的顾客：
感谢您购买思锐的产品！在正常使用过程中，如果因器材本身的材料及工艺出现质量问题，思锐将会提供免费的保修服务。在需要保修服务时，请提供本保修卡和购买凭证（收据或发票，须有商家盖章）。
思锐公司售后服务热线：400 830 2299

产品名称	保修期限
雨伞式手机三脚架	1 年

产品型号：_____ 购买日期：_____
商店名称：_____ 商店电话：_____
商店地址：_____
商店盖章：_____

顾客须知：
(1)产品保修1年,保修时间从购买之日算起。
(2)所保修的产品，必须是在思锐正式授权的经销商或电子商务处所购买，申请保修服务时需提供保修卡和销售证明(收据或发票，须有商家盖章)。
(3)需寄回思锐工厂维修的，请先拨打思锐服务电话，待确认故障后，思锐公司承担来回运费。一般性故障可在7个工作日内完成维修并寄回。
(4)保修范围不包括以下情形：
①超过保修期限的；
②在非思锐正式授权经销商处购买的；
③在未被思锐授权的代理商或维修中心维修过的；
④由于不正当操作、意外事件、自然灾害导致的故障或损伤。
⑤外观损坏，包括但不限于刮痕、凹痕。
⑥消耗性部件，如电池等随时间推移而耗损的部件。
⑦使用第三方组件或产品而造成的损坏。
⑧因非官方说明书指导的电路改造、或电池组、充电器的匹配使用不当导致的损坏。
(5)退换货政策请登录www.sirui.com了解，或咨询当地经销商。
注：本产品仅适用于普通终端用户及家庭使用，任何商业目的或商业方式使用本产品，均不属于本质保范围。

※ 本保修卡只限在中国大陆使用

维修登记表

用户姓名	
用户电话	
用户地址	
邮编	
故障维修描述	
维修人员签名	
维修时间	

※思锐公司保留产品升级和由于产品升级而变更各种参数的权利，请以实物为准，恕不另行通知。
印刷品上如有印刷错误或词语方面的错漏而造成不便，敬请包涵。

折叠方法：

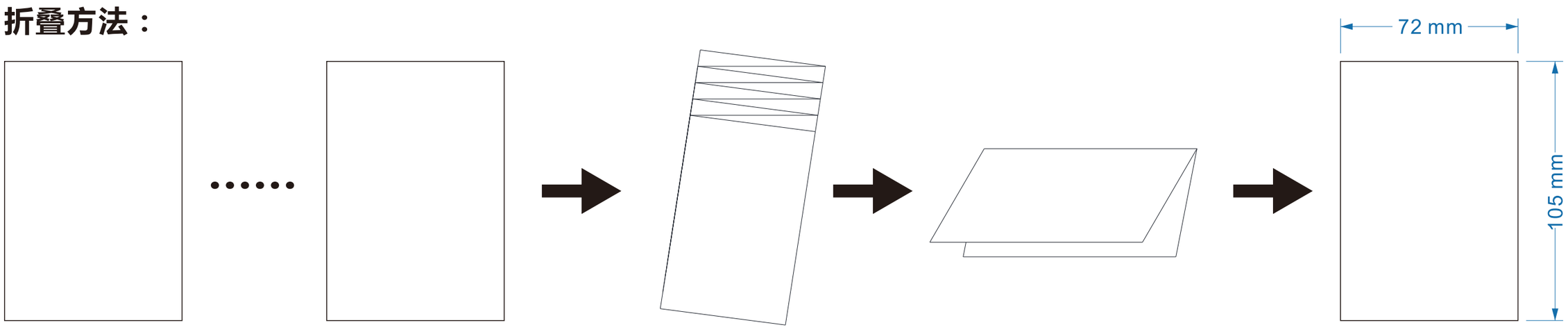

成型尺寸

制图：彭少章　　翻译：　　审核：　　批准：