思锐
影像随心　思锐随行

广东思锐光学股份有限公司

图纸名称：T-S系列说明书
物料编号：PT206
材　　质：100g双胶/CMYK四色印刷
展开尺寸：720x210mm
成型尺寸：72x105mm

T-S系列说明书正面(英文版):

SIRUI, Capturing your Imagination!

Instructions
T-S Series Tripod

SIRUI WEBSITE

GUANGDONG SIRUI OPTICAL CO.,LTD.
Add: The Third Industrial District, Wuguishan Town, Zhongshan City, Guangdong, China (Zip Code: 528458)
Tel: 86-760-88897373 Fax: 86-760-88207062
E-mail: info@sirui-photo.com Website: www.sirui.com

T-S Series Tripod Data Chart

Series No.	No.Sec.	Max.Dia. (mm)	Min.H. (mm)	Max.H. (mm)	Weight (kg)	Max.Load (kg)	Retracted Length (mm)	Folded Length (mm)	Packed Weight (kg)	Max.Load (kg)	Weight (kg)	Max.Loading (kg)
T-1204SK	4	25.8/1.02	24.5/9	140/5.5	960/34.18	1300/31.18	460/18.09	370/14.57	1440/35.78	3300/31.98	1.5/3.31	12/26.46
T-1204SX	4	25.8/1.02	24.5/9	140/5.5	960/34.18	1300/31.18	460/18.09	370/14.57	1440/35.78	3300/31.98	1.2/2.65	12/26.46
T-1204SE	4	29.4/1.16	34.5/13.6	140/5.5	1070/42.13	1400/36.29	510/20.08	400/15.75	1440/35.78	3300/31.98	1.4/3.1	15/33.1
T-1204SK	4	29.4/1.16	34.5/13.6	140/5.5	1070/42.13	1400/36.29	510/20.08	400/15.75	1440/35.78	3300/31.98	1.6/3.53	15/33.1

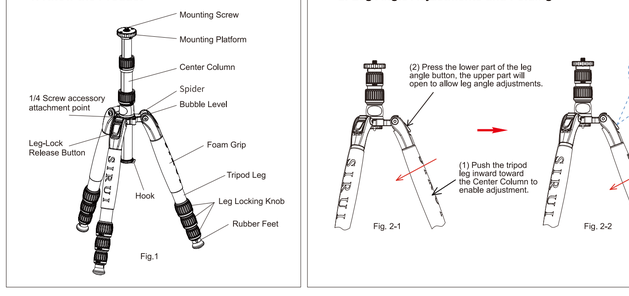

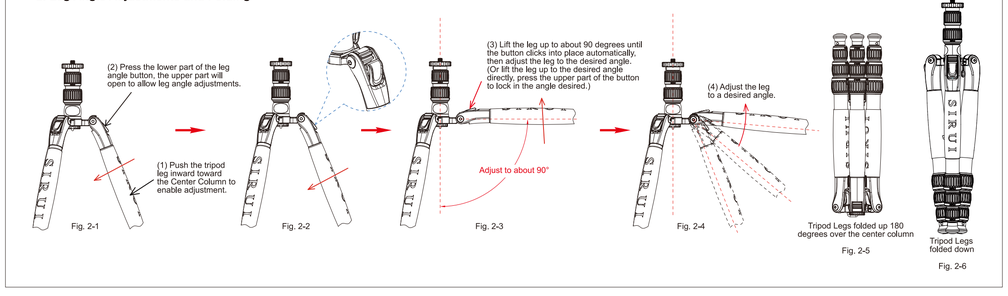

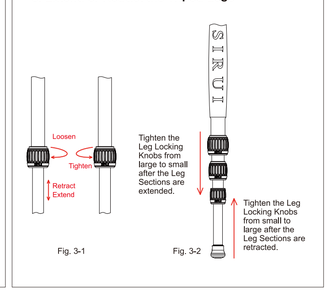

1. Know your Product (Fig.1)
2. Leg Angle Adjustments and Folding
The Tripod can be adjusted to 3 angles (22°, 52°, 82°). Press the button and lift up the leg to about 90°, the button will automatically click back in place and lock the leg angle automatically. Close or fold up the tripod legs as Fig.2-1 to Fig.2-6.
3. Extend or Retract the Tripod Legs (Fig.3-1 and Fig.3-2)
Loosen the Leg Lock Knobs with 1/2 turn clockwise all at the same time or separately to extend the Leg Sections to the desired length, lock the Leg Sections by turning the Leg Lock Knobs counter-clockwise from large to small. Retract the Leg Sections from small to large by loosening or locking the Leg Lock Knobs.
4. Use of the Center Column (Fig.4-1 and Fig.4-5)
The Center Column of the Tripod can be extended or retracted for adjusting the height, and can reverse or convert for low shooting.Change to the Short Center Column can allow the tripod to get close to the ground for shooting.The Hook can be removed and used as an Allen Key.
5. Convert the Detachable Leg into a Monopod (Fig.5-1 to Fig.5-3)
The Detachable Leg of the Tripod can be converted into a Monopod, and connect with the Center Column for additional height of the Monopod.
6. Change the Rubber Feet to Spike (Fig.6-1 and Fig.6-2)
Loosen and remove the Rubber Feet for changing to Spike.
7. Use of Mounting Screw, Set Screw and 1/4 screw accessory mounting hole. (Fig.7).

Attention:
※ Specifications of products may be changed without notice.

- Do not exceed the recommended load limit of the head and/or tripod. (Please refer to product specifications.)
- Please make sure that the locks are securely tightened when in use.
- This product should not be used in environments that exceed the following conditions (-40～+100℃/-40～+212℉). And, when used in damp, dirty or dusty environments, please clean and dry thoroughly after use, to assure proper functioning in the future. It is not recommended to expose this product to saltwater. If exposed, please clean with mild soap and warm water and towel dry.
- Please keep from high temperatures and direct exposure to bright sunlight for extended periods of time.
- Please do not leave the equipment alone in a public place, which can be an inconvenience or hazard to others.
- To protect your camera gear, please remove it from the tripod/ball head when transporting from place to place.
- Please use a soft towel with warm water and mild soap to clean the locking system and gilding parts when necessary. Towel dry before storing the tripod.
- Under most situations, there is no need to lubricate any parts of this product. The addition of most lubricants will gum up the mechanisms and reduce their normal gliding characteristics. Please call or email us if you have any questions or special needs.
- Please keep this product away from all electrical power sources.

WARRANTY CARD/INFORMATION

Dear SIRUI Customer,
Thank you for your purchase of SIRUI Professional Products!
SIRUI warrants that your purchase is free from defects in materials and workmanship under normal use during the Limited Warranty Period . The Warranty begins on the original date of purchase on your sales receipt and is not transferrable. If service is required, a copy of the sales receipt must be included with an explanation of the problem.

Product	Warranty Length
Tripods / Monopods / Accessories	6 years
Humidity Control Cabinet (Cabinet)	
Humidity Control Cabinet (Electronics)	3 years

Model: . . . . . Date: . . . . . .
Store: . . . . . Serial Number: . . . . . .

Warranty coverage can differ from region to region.
Please see the contact information below for product registration, information and service for the region the product was purchased in.

SIRUI 6 (six) Year Limited Warranty (3 Year Warranty for Electronic Parts).
This warranty shall be limited to repair, adjustment and/or replacement at SIRUI or its authorized distributors option, of defective parts, free of charge (except the cost of transportation to the distributor/service center).
Responsibility is limited to the actual cost of the item . Call or Email with questions and service before sending any product to the center in your region.
Below is a listing of contact information for Product Registration, Service Inquiries and Questions.SIRUI will not be responsible for expenses or inconveniences, or consequential damages to equipment, or by breach of any expressed or implied warranties.

Limitations:
Warranty is not transferable.
This warranty covers all defects encountered in normal use of the equipment and does not apply in the following cases:
1. If the equipment has been serviced by other than an authorized SIRUI Service Center.
2. Damage to the equipment is due to modification (including but not limited to, the removal of ballhead clamps), overloading, mishandling, abuse, accident, sand*, corrosives, water damage* or not following operating instructions.
3. No valid proof of purchase is provided.
4. Damage caused by acts of nature (including, but not limited to fires, floods or earthquakes).

Warranty coverage can differ from region to region. Please see contact information below for product registration,information and service for the region the product was purchased in.

CAUTION
Please remove the camera from the tripod when changing the position of the tripod. Do not place the tripod, with camera attached, over your shoulder or carry the tripod horizontally by the legs. Strong shaking may cause damage of the screw in the mounting plate and/or the camera. Please extend the legs from the biggest tube to smallest tube; close the legs from the smallest tube to biggest tube; to avoid leg parts bashing damage.

Warranty Address and Contact Information:
(Please contact the seller or the local distributor where the product was purchased for warranty issues or questions and before any product is sent.)

1.Guangdong SIRUI Optical Co., Ltd.
The Third Industrial District, WuguishanTown, ZhongshanCity, Guangdong, China
Tel:0086-760-88897373 Fax:0086-760-88207062
Http://www.sirui.com E-mail: info@sirui-photo.com
Service Hotline: 0086-400 830 2299

2.SIRUI USA, LLC
Add: 29 Commerce Court Verona, NJ 07044
www.siruiusa.com
Service: Toll Free 866-373-0829 E-mail: info@sirui.com
FOR PRODUCTS PURCHASED IN THE USA PLEASE SEE:
For full details on USA Warranty Terms and Limitations:
https://www.siruiusa.com/warranty.html
To register products: https://www.siruiusa.com/product-registration.html

3.Focus Nordic AB
For technical support, service or repairs, please contact:
Sweden: info@focusnordic.se www.focusnordic.se
Norway: info@focusnordic.no www.focusnordic.no
Denmark: info@focusnordic.dk www.focusnordic.dk
Finland: info@focusnordic.fi www.focusnordic.fi
Iceland: info@focusnordic.is www.focusnordic.is
Latvia: info@focusnordic.lv www.focusnordic.lv
Estonia: info@focusnordic.ee www.focusnordic.ee
Lithuania: info@focusnordic.lt www.focusnordic.lt
Poland: info@focusnordic.pl www.focusnordic.pl

4. TSE Imaging BV
Add: Argonweg 135,1362AD Almere,The Netherlands
Telephone: +31 (0)36 8450348 E-mail: service@tse-imaging.nl
(Exclusive Distributor for Netherlands, Belgium, Luxemburg)
www.sirui-photo.nl

5. 대표연터프라이즈
한국 충한, 기술지원 및 보증서비스 제공.
서울특별시 용구 남대문로 10, 1층
Tel: 02-752-3304 Fax: 02-774-9903
www.sirui.co.kr lowepro kr@gmail.com

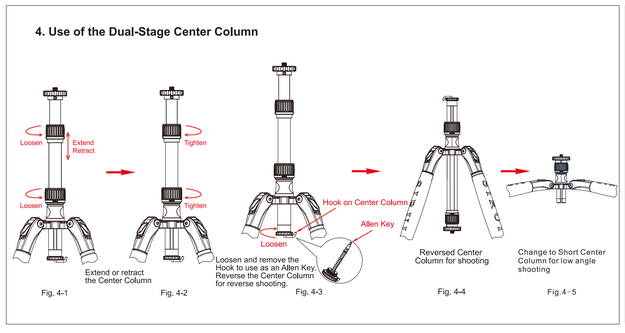

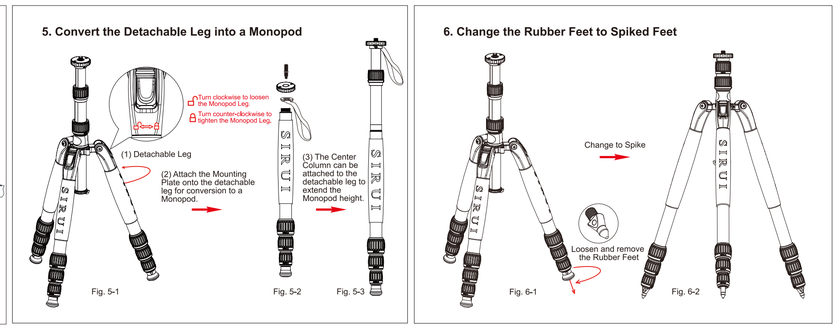

T-S系列说明书背面(中文版):

影像随心 思锐随行

使用说明
T-S系列三脚架

SIRUI中文官网

广东思锐光学股份有限公司
地址: 广东省中山市五桂山第三工业区　邮编: 528458
电话: 0760-88897373　传真: 0760-88207062　服务热线: 400 830 2299
邮箱: info@sirui-photo.com　网址: www.sirui.com

T-S系列三脚架参数

型号	节数	最大直径 (mm)	最小高度 (mm)	最大高度 (mm)	重量 (kg)	承重 (kg)	收起长度 (mm)	折叠长度 (mm)	毛重 (kg)	承重 (kg)	重量 (kg)	承重 (kg)
T-1204SK	4	25.8	15	140	980	1300	480	370	1340	330	1.5	12
T-1204SX	4	25.8	15	140	980	1300	480	370	1340	330	1.2	12
T-1204SE	4	29.4	18.5	140	1070	1420	510	400	1400	350	2.0	15
T-1204SK	4	29.4	18.5	140	1070	1420	510	400	1400	350	1.6	15

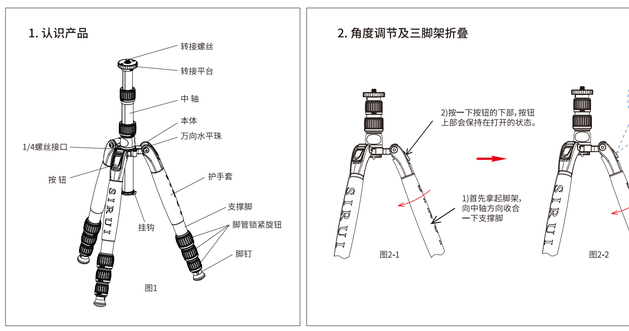

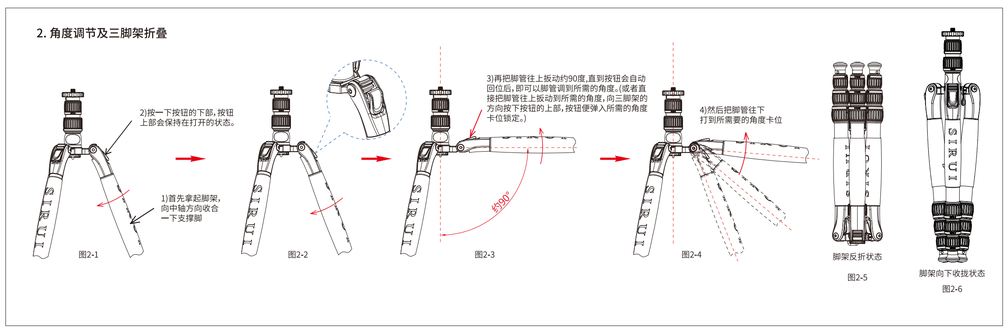

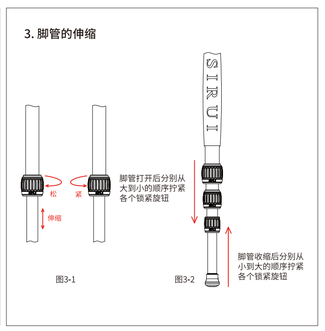

1. 认识产品(图1如所示)；
2. 三脚架可调三种角度，分别约为22°、52°、82°；当按下按钮，把脚管抬到约90°，按钮可自动回位锁定角度；脚架可逐真收合和反折收合(如图2-1至图2-6所示)；
3. 伸缩脚架管：按图示的方向同时或分别将锁紧旋转转动约1/2圈，然后将脚管拉出您所需要的长度，再按图示方向，分别从大到小的顺序拧紧各个锁紧旋钮；收缩时松开锁紧旋钮应按从小到大的顺序操作(如图3-1至图3-2所示)；
4. 三脚架的中轴可伸缩调节高度，挂钩拆下后可当作六角扳手使用；中轴可转换倒置拍摄模式,更换短中轴后可转换成低拍模式(如图4-1至图4-5所示)；
5. 三脚架的可拆脚拆卸后可转换成独脚架,与中轴连接可增加长度(如图5-1至图5-3所示)；
6. 三脚架的包胶脚钉拆卸后装上钢钉可更换成钢钉模式(如图6-1至图6-2所示)；
7. 三脚架上的转接螺丝、紧定螺丝以及1/4螺纹接口的使用(如图7所示)。

※恩锐公司保留产品升级和由于产品升级而变更各种参数的权利，请以实物为准，恕不另行通知。印刷品上如有印刷错误或词语方面的错漏而造成不便，敬请包谅。

注意事项:

- 不要超过最大的制定负重(请参考个别产品说明)；
- 当使用产品时，时常紧锁其安全装置；
- 切勿在温度低于零下40摄氏度及高于100摄氏度使用,当在潮湿、沙地、布满尘埃的环境下使用后，谨记将产品弄干及清洁，不建议在海水中使用；
- 切勿将产品长时间放在太阳下暴晒及避免高温环境，例如长时间放在车厢内或玻璃后；
- 在公众地方使用时，如在没有人照料下，切勿留下设备而引致其他公众不便；
- 建议在运输过程中，将设备(例如相机)从脚架上移除；
- 使用温和清洁剂及柔软毛巾清洁，将尘埃及沙粒从所有锁制及活动部件清除；
- 除非有需要，此设备无需定期添加润滑油，如确实需要时，请使用标准润滑油或油蜡；
- 为自身安全着想，切勿将产品接触任何电源。

保修卡

尊敬的顾客:
感谢您购买思锐的产品！在正常使用过程中，如果因器材本身的材料及工艺出现质量问题，思锐将会提供免费的保修服务。
在需要保修服务时，请提供本保修卡和购买凭证(收据或发票，须有商家盖章)，思锐公司售后服务热线:400 830 2299

产品名称	保修期限
脚架	6年
云台	
防潮柜本体	
电子部分	3年

产品型号: . . . . . 购买日期: . . . . . .
商店名称: . . . . . 商店电话: . . . . . .
商店地址: . . . . . .
商店盖章: . . . . . .

顾客须知:
1. 思锐产品，享受6年免费保修(电子部分为3年)，保修时间从购买之日算起;
2. 所保修产品,必须是思锐正式授权的经销商或电子商务处购买;
3. 需邮寄回思锐工厂维修的,请先拨打思锐服务电话,待确认故障后,思锐公司承担来回运费。一般性故障可在7个工作日内完成维修并寄回;
4. 以下情况不在保修范围:
① 超过保修期限的;
② 在非思锐正式授权经销商处购买的;
③ 在未被思锐授权的代理商或维修中心维修过的;
④ 由于不正当操作、意外时间、自然灾害导致的故障或损伤。
※ 本保修卡只限在中国大陆使用

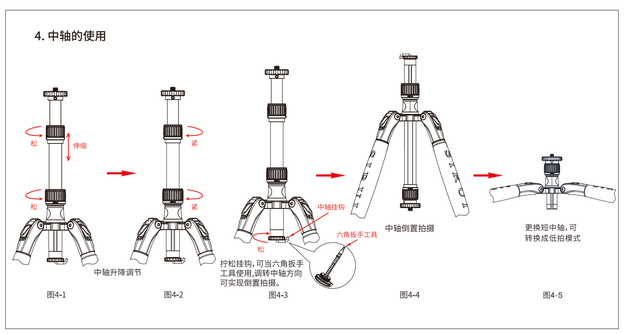

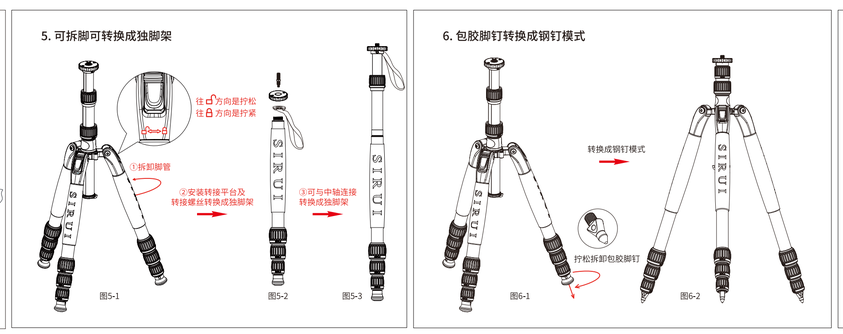

温馨提醒
1. 在使用照架拍摄且需要移动位置时，请将相机从三脚架上取下，切勿将相机装在脚架上一起移动。脚架的尾部(特别是安装了长焦镜头的相机)可能会使转接螺丝断裂，请照顾环境和。
2. 伸展脚架时，请从最大管径的脚管到最小管径的脚管的顺序伸展；收纳脚管时，请从最小管径的脚管到最大管径的脚管的顺序收纳。

维修登记表

用户姓名	
用户电话	
用户地址	
邮编	
故障维修描述	
维修人员签名	
维修时间	

说明书折叠方法:

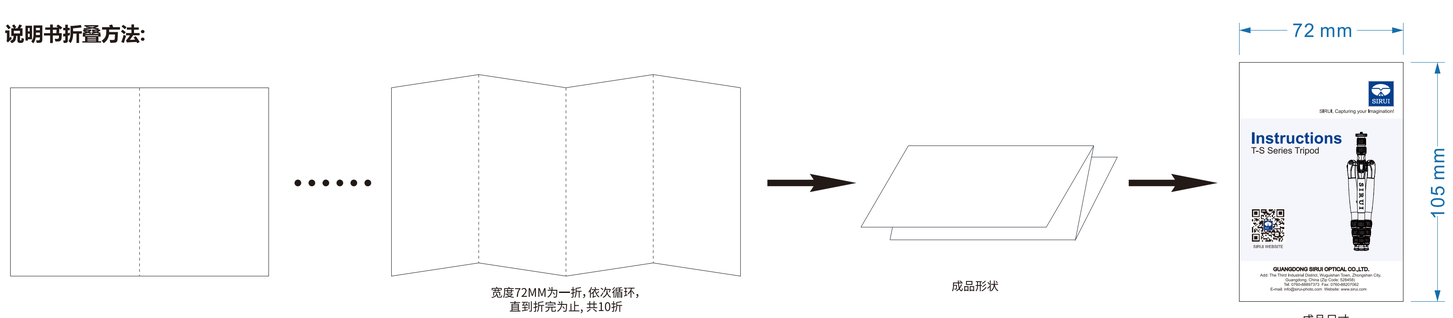

包装工程师：彭少章　　审核：　　翻译：　　批准：